Sequence Diagram
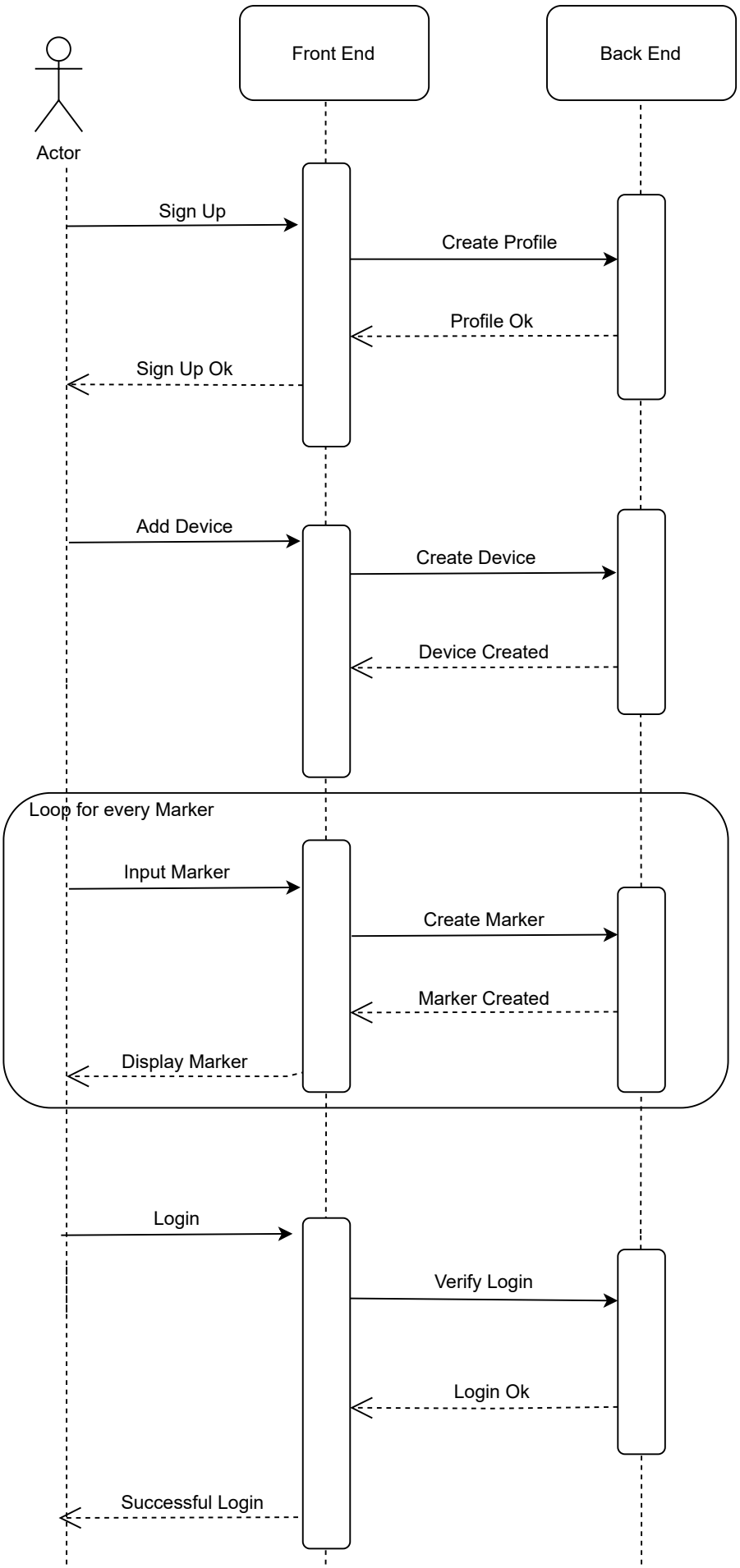
Carlos Martinez-Cortes | Water Wand App | Fall 2021